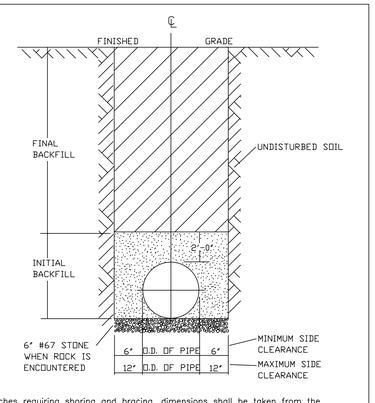

NOTES:
1. Trenches requiring shoring and bracing, dimensions shall be taken from the inside face of the shoring and bracing.
2. No rocks or boulders 4" or larger to be used in initial backfill.
3. All backfill material shall be suitable native material.
4. Backfill shall be tamped in 6" lifts in traffic areas, 12" in non-traffic areas.
5. Achieve 80% compaction in non-traffic areas, and 95% compaction in traffic areas.
7. No boulders 8" in diameter or greater allowed in final backfill.

TRENCH BOTTOM DIMENSIONS & BACKFILLING REQUIREMENTS FOR DUCTILE IRON AND REINFORCED CONCRETE PIPE.

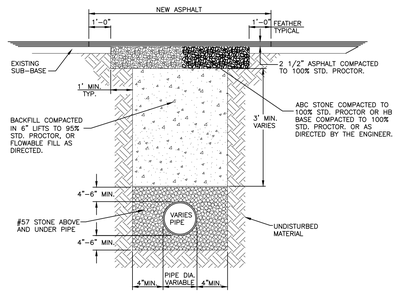

FLOWABLE FILL TRENCH-CUT STREET, WATER, SEWER AND STORMWATER

TRENCH CUT INSTALLATION

CITY of DUNN NORTH CAROLINA Department of Public Works

500.03

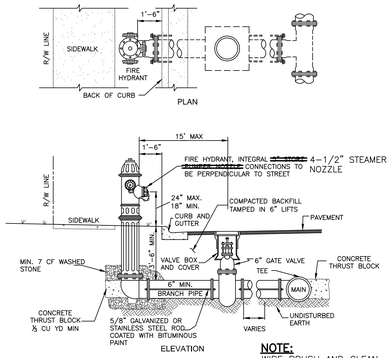

NOTE:
WIRE BRUSH AND CLEAN FIRE HYDRANTS AND PAINT WITH RED ENAME RUST RESISTING PAINT.

GENERAL NOTES:
1. ALL CONCRETE BLOCKING SHALL BE 3000 P.S.I. MINIMUM.
2. ALL HYDRANT VALVES SHALL BE RODDED TO MAIN LINE.
3. HYDRANT TO BE LOCATED 10' FROM P.T. OR P.C. AT INTERSECTIONS.
4. THE HYDRANT PUMPER NOZZLE SHALL BE OF ONE-PIECE DESIGN.
5. THE NOZZLE SHALL BE AN INTEGRAL PART OF THE FIRE HYDRANT AND MUST BE FURNISHED BY THE MANUFACTURER OR AUTHORIZED DISTRIBUTOR. ADAPTERS WILL NOT BE ACCEPTED.

STANDARD FIRE HYDRANT

CITY of DUNN NORTH CAROLINA Department of Public Works

Revised: 1/28/11
Scale: NTS
600.0
Sheet 1 of 1

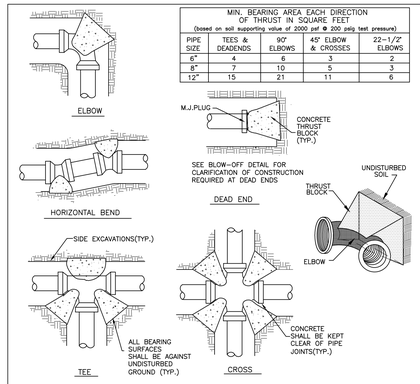

MIN. BEARING AREA EACH DIRECTION OF THRUST IN SQUARE FEET
(based on soil supporting value of 2000 psf @ 200 psig test pressure)

PIPE SIZE	TEES & DEADENDS	90° ELBOWS	45° ELBOW & CROSSES	22-1/2° ELBOWS
6"	4	6	3	2
8"	7	10	5	3
12"	15	21	11	6

NOTES:
1.) THRUST BLOCKS SHALL BE INSTALLED ON PVC WATER DISTRIBUTION LINES 6" THRU 12" DIA. IN THE MANNER SHOWN. SEE STANDARD ALT. RESTRAINING DETAIL 600.04 FOR ACCEPTABLE ALTERNATE RESTRAINING SYSTEMS.
2.) PIPE GREATER THAN 12 INCH DIAMETER SHALL REQUIRE RESTRAINT JOINT PIPE FOR THE PROPER LENGTH.
3.) COMPACT FITTINGS ARE NOT ACCEPTABLE. STANDARD FITTINGS SHALL BE USED WITH CONCRETE THRUST BLOCKING.
4.) THRUST BLOCKS SHALL BE INSTALLED ON SEWER FORCE MAIN IN THE MANNER SHOWN.
5.) IF SAC-CRETE IS USED, MIXING MUST BE ON SITE UTILIZING A MECHANICAL MIXER.
6.) NO CONCRETE SHALL BE PLACED ON BOLTS. WRAP JOINT FITTINGS WITH PLASTIC.
7.) CONCRETE SHALL BE A MINIMUM 3,000 psi.
8.) ALL BEARING SURFACES SHALL BE AGAINST UNDISTURBED SOIL AND SHALL BE APPROVED BY PWC PROJ. COORDINATOR PRIOR TO PLACEMENT OF CONCRETE.
9.) USE OF RESTRAINED JOINT DUCTILE IRON WILL BE REQUIRED IF SOIL CONDITIONS DO NOT ALLOW THE USE OF THRUST BLOCKS
10.) ALL VERTICAL BENDS SHALL BE RESTRAINED USING RESTRAINED JOINT DUCTILE IRON PIPE.

HORIZONTAL THRUST BLOCKING

CITY of DUNN NORTH CAROLINA Department of Public Works

Revised: 1/28/11
Scale: NTS
600.03
Sheet 1 of 1

ROOF DRAIN TAP DETAIL REMOVED 2

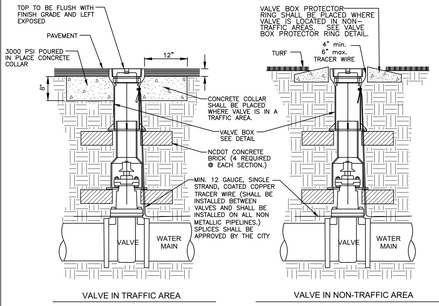

1. ALL MATERIALS SHALL BE IN ACCORDANCE WITH CITY STANDARDS.
2. RESILIENT WEDGE GATE VALVE SHALL BE AS MANUFACTURED BY MUELLER CORP., AMERICAN DARLING OR CLOW CORP.
3. ALL VALVES SHALL HAVE 2" SQUARE OPERATING NUT AND SHALL OPEN COUNTERCLOCKWISE.
4. VALVE BODY, BONNET AND GATE SHALL BE IN ACCORDANCE WITH AWWA C-509/C-515 AND NSF61.
5. VALVE BODY AND BONNET SHALL BE COATED ON ALL INTERIOR AND EXTERIOR SURFACES WITH A FUSION BONDED EPOXY IN ACCORDANCE WITH AWWA C-550-90.
6. ALL VALVES 24" AND SMALLER SHALL HAVE A SAFE WORKING PRESSURE OF 250 PSI.
7. SEE VALVE BOX DETAIL FOR ADDITIONAL INFORMATION.
8. SEE VALVE BOX PROTECTOR RING DETAIL FOR ADDITIONAL INFORMATION.
9. VALVE BOX SECTIONS ARE REQUIRED. THE USE OF PIPE IN LIEU OF VALVE BOX SECTIONS SHALL NOT BE PERMITTED.

NOTE:
WIRE BRUSH AND CLEAN ALL CASTINGS AND PAINT WITH FLAT BLACK RUST RESISTING PAINT.

GATE VALVE

CITY of DUNN NORTH CAROLINA Department of Public Works

Revised: 1/28/11
Scale: NTS
600.09
Sheet 1 of 1

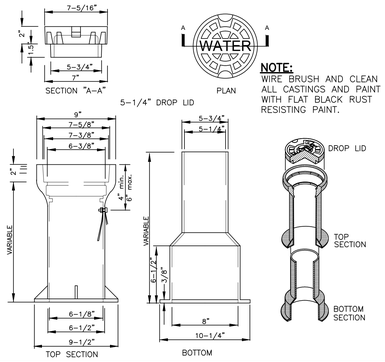

NOTE:
WIRE BRUSH AND CLEAN ALL CASTINGS AND PAINT WITH FLAT BLACK RUST RESISTING PAINT.

NOTES:
1. VALVE BOX SHALL BE 3 PART SLIP-TYPE MANUFACTURED BY ALABAMA PIPE CO., CHAPMAN VALVE CO., COLOMBIAN IRON WORKS, R.D. WOOD CO. OR APPROVED EQUAL.
2. VALVE BOX SHALL BE 3-PIECE CLOSE GRAINED CAST IRON SLIP-TYPE VALVE BOX WITH A MINIMUM THICKNESS OF 3/16".
3. VALVE BOX SHALL HAVE RAISED LETTERS "WATER" CAST INTO COVER.
4. VALVE BOX SHALL HAVE 3/8" HOLE DRILLED IN TOP SECTION THRU WHICH A 1/4"x1-1/2" GALVANIZED BOLT SHALL BE USED TO SECURE A MINIMUM 12 GAUGE, SINGLE STRAND, COATED COPPER TRACER WIRE FOR NON-FERROUS PIPE. A 1/2" WASHER SHALL BE USED BETWEEN NUT AND INSIDE OF BOX.TIGHTEN HAND TIGHT.
5. SCREW TYPE VALVE BOXES ARE NOT ACCEPTABLE.
6. DIMENSIONS SHOWN ARE FOR INFORMATION ONLY AND VARY BASED UPON THE MANUFACTURER.
7. VALVE BOX SECTIONS ARE REQUIRED. THE USE OF PIPE IN LIEU OF VALVE BOX SECTIONS SHALL NOT BE PERMITTED.
8. TRACING WIRE SHALL BE INSTALLED OUTSIDE OF BOX.

VALVE BOX

CITY of DUNN NORTH CAROLINA Department of Public Works

Revised: 1/28/11
Scale: NTS
600.10
Sheet 1 of 1

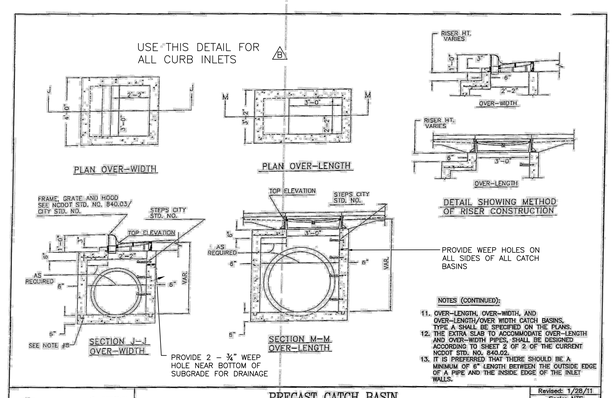

NOTES (CONTINUED):
11. OVER-LENGTH, OVER-WIDTH, AND OVER-LENGTH/OVER WIDTH CATCH BASINS, TYPE A SHALL BE SPECIFIED ON THE PLANS.
12. THE EXTRA SLAB TO ACCOMMODATE OVER-LENGTH AND OVER-WIDTH PIPES, SHALL BE DESIGNED ACCORDING TO SHEET 2 OF 2 OF THE CURRENT NCDOT STD. NO. 840.03.
13. IT IS PREFERRED THAT THERE SHOULD BE A MINIMUM OF 8" LENGTH BETWEEN THE OUTSIDE EDGE OF A PIPE AND THE INSIDE EDGE OF THE INLET WALLS.

PRECAST CATCH BASIN
GRATED INLET

CITY of DUNN NORTH CAROLINA Department of Public Works

Revised: 1/28/11
Scale: NTS
800.09
Sheet 2 of 2

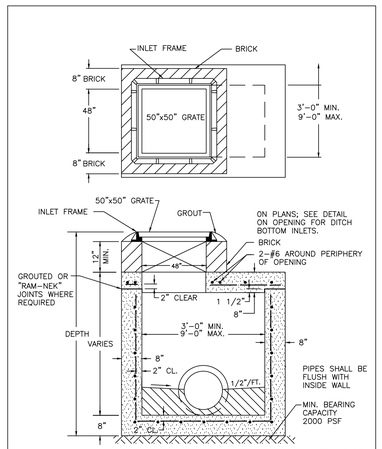

STORM SEWER GRATED INLET N.T.S.

USE THIS DETAIL FOR ALL CATCH BASINS AND YARD INLETS INLETS

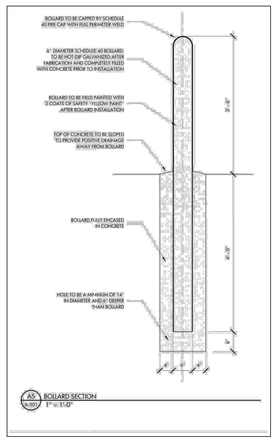

THE SITE GROUP, PLLC. CIVIL ENGINEERING • LANDSCAPE ARCHITECTURE • PLANNING
CERT. NO. 353
1111 OBERLIN ROAD RALEIGH, NORTH CAROLINA
NC ENGINEERING LICENSE NO. P-0803

NORTH CAROLINA PROFESSIONAL SEAL 030844 ENGINEER JOSHUA W. JOHNSON
9/16/24

THE SITE GROUP
CIVIL ENGINEERS • LANDSCAPE ARCHITECTS
THE SITE GROUP, PLLC.
1111 Oberlin Road
Raleigh, NC 27605-1136 USA
Office: 919.835.4787
Fax: 919.839.2255
E Mail: SRN@thesitegroup.net

ROOMS TO GO
400 Perimeter Center Terrace, Suite 800
Atlanta, GA 30346
Phone: (678) 475-0499
FAX(678) 475-1398

CONSTRUCTION DOCUMENTS FOR:
ROOMS TO GO BUILDING AND PARKING EXPANSION
ROOMS TO GO WAY
DUNN, HARNETT COUNTY, NORTH CAROLINA

Drawn By JHJ
Checked By BDM

DATE:
05 JAN 2024
REVISED:
1 18 JAN 2024
2 16 FEB 2024

CONSTRUCTION DOCUMENTS

SITE DETAILS

Job Code RTGDE

Dwg No.
SITE 601

Copyright © 2024 The Site Group, PLLC. ALL RIGHTS RESERVED